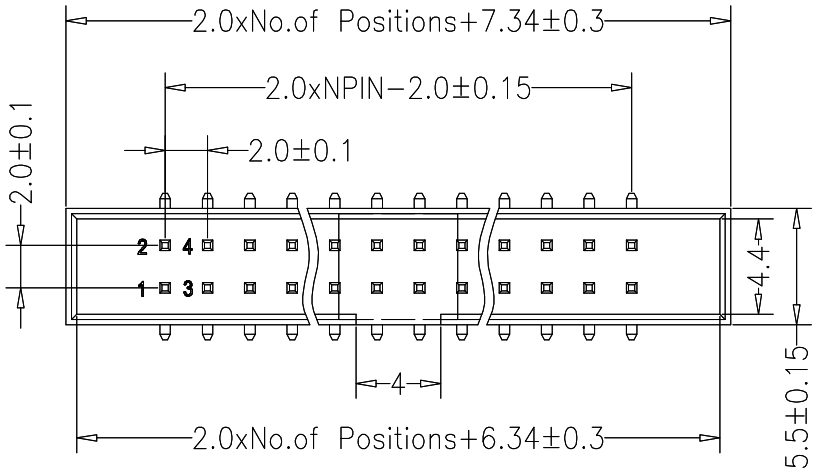

Recommended P.C.B Layout(Top Side)
(PCB BOARD TOLERANCE±0.05)

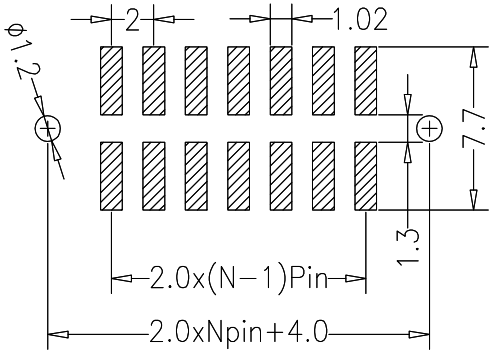

HSF RoHS FILE NO :E362810

SPECIFICATIONS
Rated Current:1.5AMP
Contact Resistance:20mΩ Max
Withstand Voltage:400V AC/DC
Insulation Resistance:800MΩ Min
Operation Temperature:−40°c to +105°c

Contact Material:Brass
Contact Plating:Au or Sn Over Ni
Insulator Material:Polyester(UL94V−0)
Standard: PA6T
Max.Processing Temp: 230°C for 30−60 seconds
(260°C for 10 seconds)

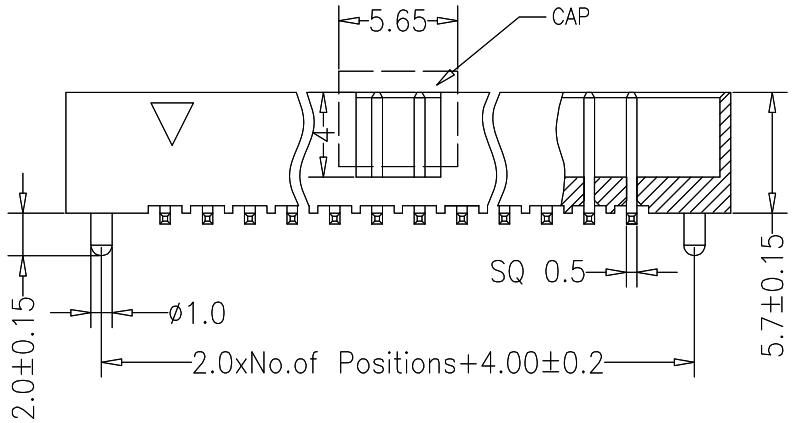

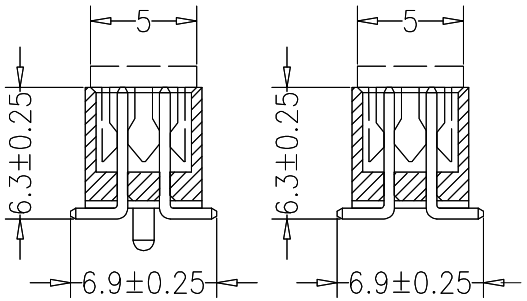

TYPE 02
With Post

TYPE 01
Without Post

Pin	P/N	Pin	P/N
6	12110612001	36	12113612001
8	12110812001	38	12113812001
10	12111012001	40	12114012001
12	12111212001	42	12114212001
14	12111412001	44	12114412001
16	12111612001	46	12114612001
18	12111812001	48	12114812001
20	12112012001	50	12115012001
22	12112212001	52	12115212001
24	12112412001	54	12115412001
26	12112612001	56	12115612001
28	12112812001	58	12115812001
30	12113012001	60	12116012001
32	12113212001	62	12116212001
34	12113412001	64	12116412001

Dwg. No.		12D000010		IDC BoxHeader XXPIN 2.00mm Type Male SMT	寰导hnndo		
Projection					P/N	1211XX12001	
Unit	mm	Scale	NOT TO SCALE		Date	2025/8/1	Ver.NO 1.0
Type	IDC	Sheet	1/1				