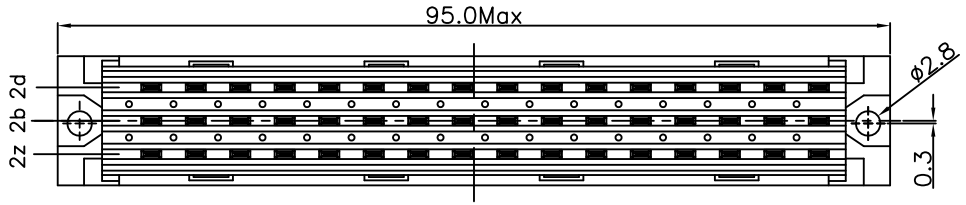

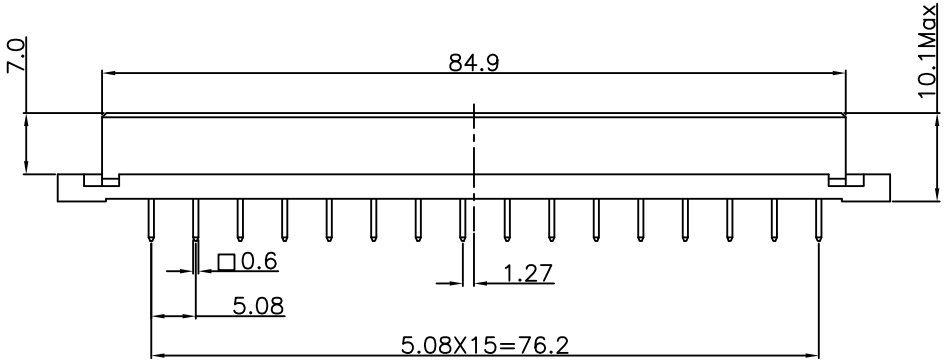

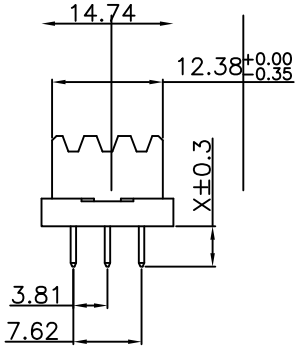

Material:

Housing: Thermoplastic Polyester Glass Filled UL94V-0.
Contacts: Copper Alloy.

Electrical Characteristics:

Current Rating: 5.6 AMP.
Dielectric Withstanding Voltage: AC 1550V For 1 minute.
Insulator Resistance: 1000MΩ min. at DC 500V.
Contact Resistance: 15mΩ max. at DC 100mA.
Operating Temperature: -55°C~+125°C .

***RoHS Compliant**

***Default without lock buckle**

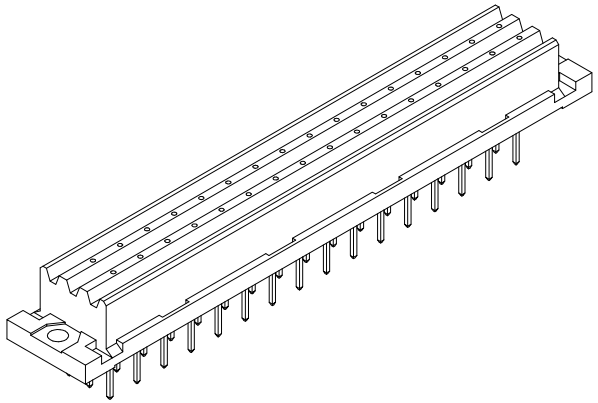

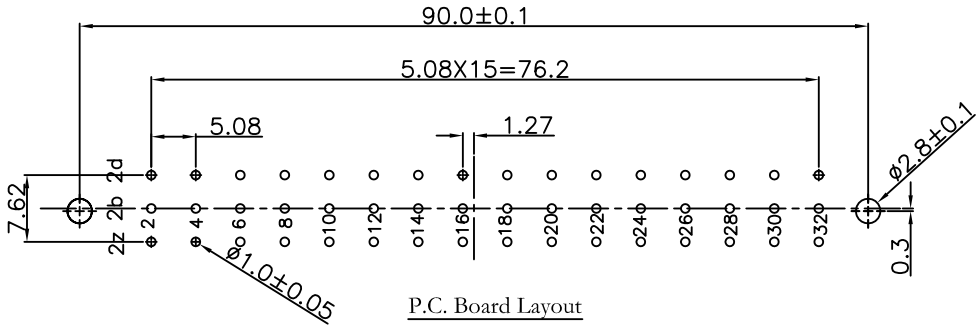

P.C. Board Layout

Dwg. No.		11D000055		DIN Power F 348 180° Type Female 5.08mm Low	寰宇hnndo			
Projection								
Unit	mm	Scale	NOT TO SCALE		P/N	11644821001		
Type	F	Sheet	1/1		Date	2025/8/1	Ver. NO	1.0