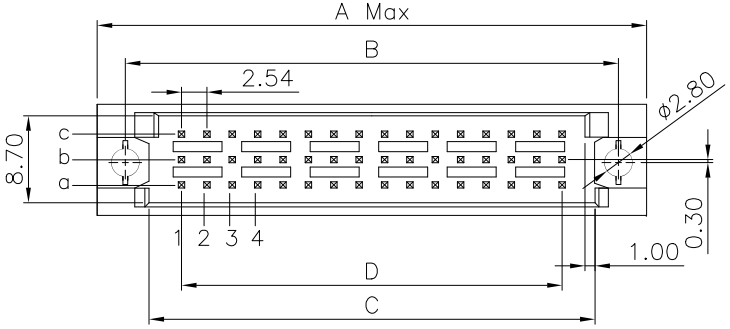

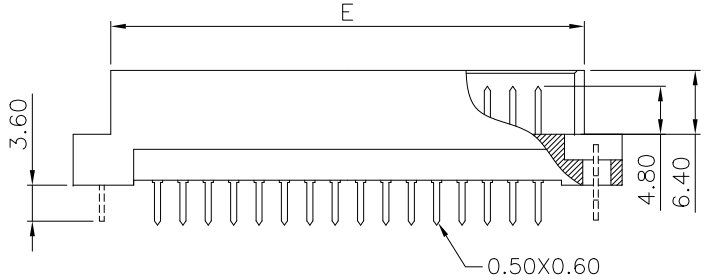

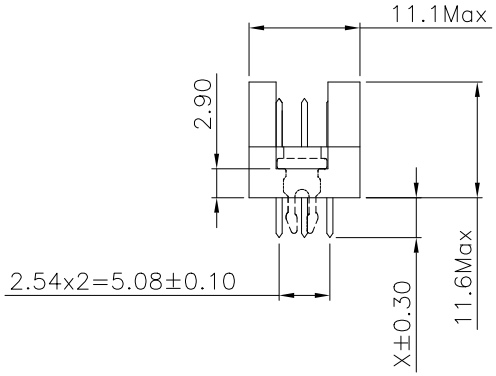

Material and Plating:

Housing: PBT,UL94V-0,Beige

Contacts: Brass

Gold Plated on Contact Area and 80u" Min Tin or Gold Flash Plated on Solder Tail over Nickel 50u" Min .

Lock: Phosphor Bronze

80u" Min Tin Plated over Nickel 50u" Min .

Electrical Characteristics:

Current Rating: 2 AMP.

Dielectric Withstanding Voltage: AC 1000V For 1 minute.

Insulator Resistance: 10^6MΩ min. at DC 500V.

Contact Resistance: 20mΩ max. at DC 100mA.

Operating Temperature: -55°C ~+125°C .

***RoHS Compliant**

***Default without lock buckle**

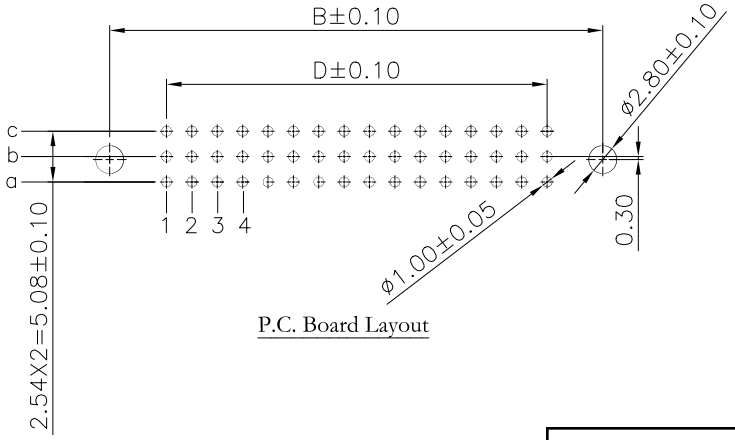

P.C. Board Layout

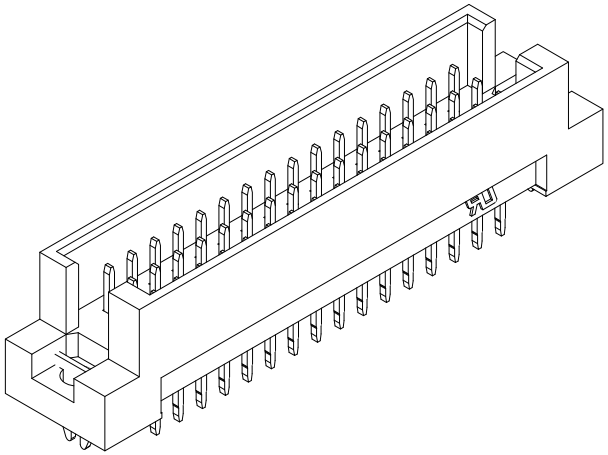

Dwg. No.		11D000015		DIN Signal 2R 332 90° Type Male 2.54mm	寰宇hnndo		
Projection							
Unit	mm	Scale	NOT TO SCALE		P/N	11173211001	
Type	2R	Sheet	1/1		Date	2025/8/1	Ver. NO 1.0